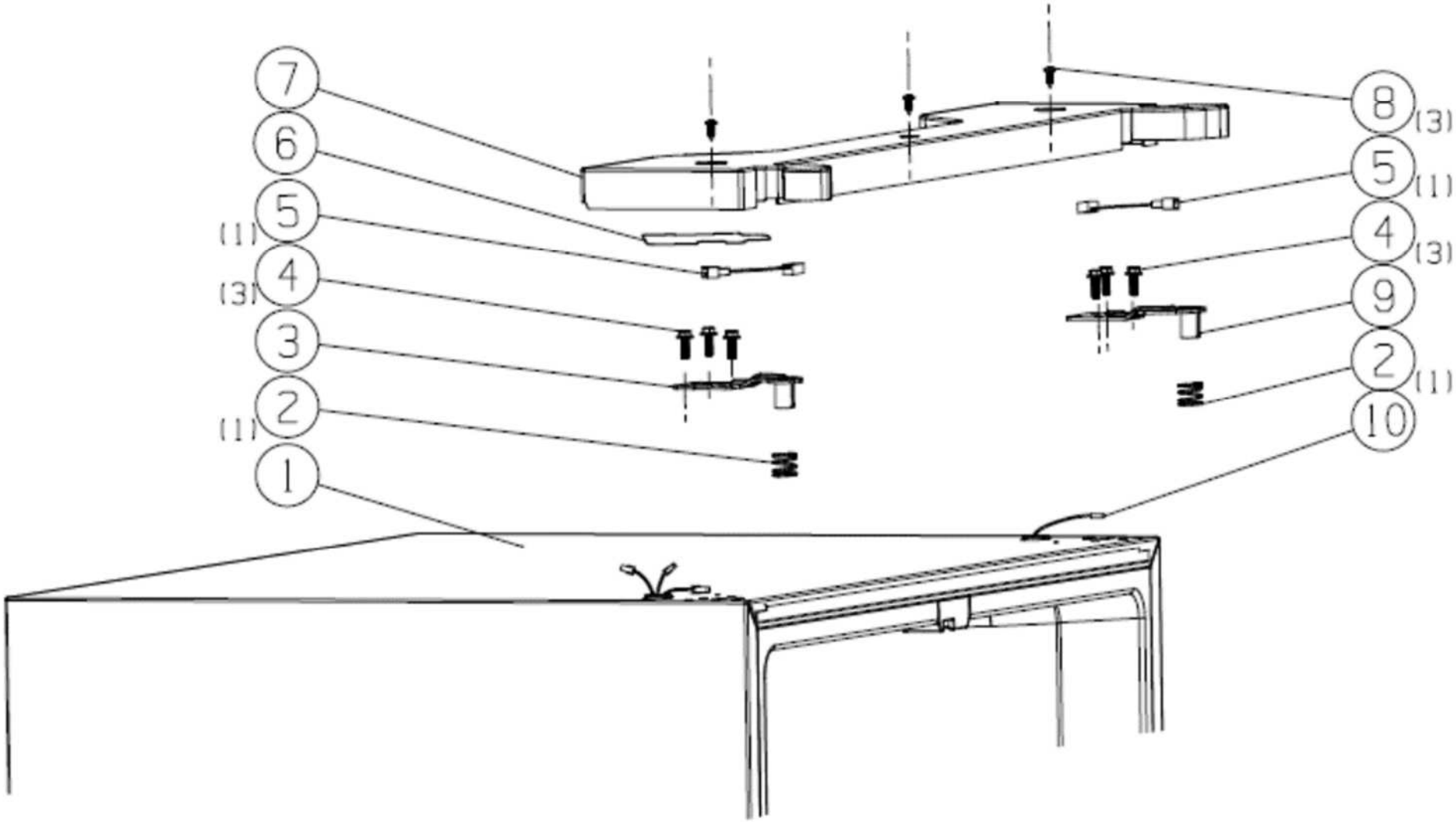
7
6
5
(1)
4
(3)
3
2
(1)
1
8
(3)
5
(1)
4
(3)
9
2
(1)
10

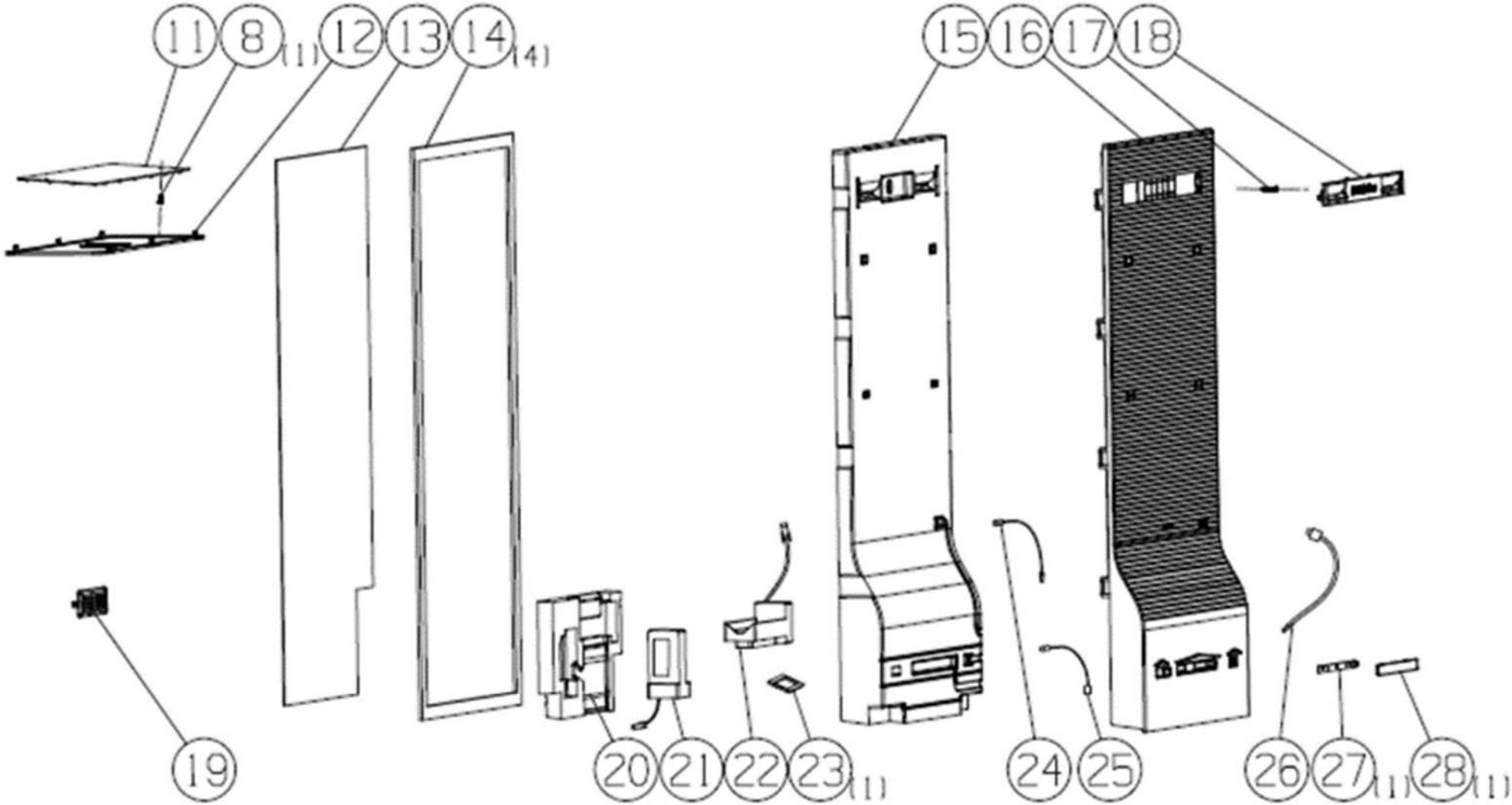
11
8 (1)
12
13
14 (4)
15
16
17
18
19
20
21
22
23 (1)
24
25
26
27 (1)
28 (1)

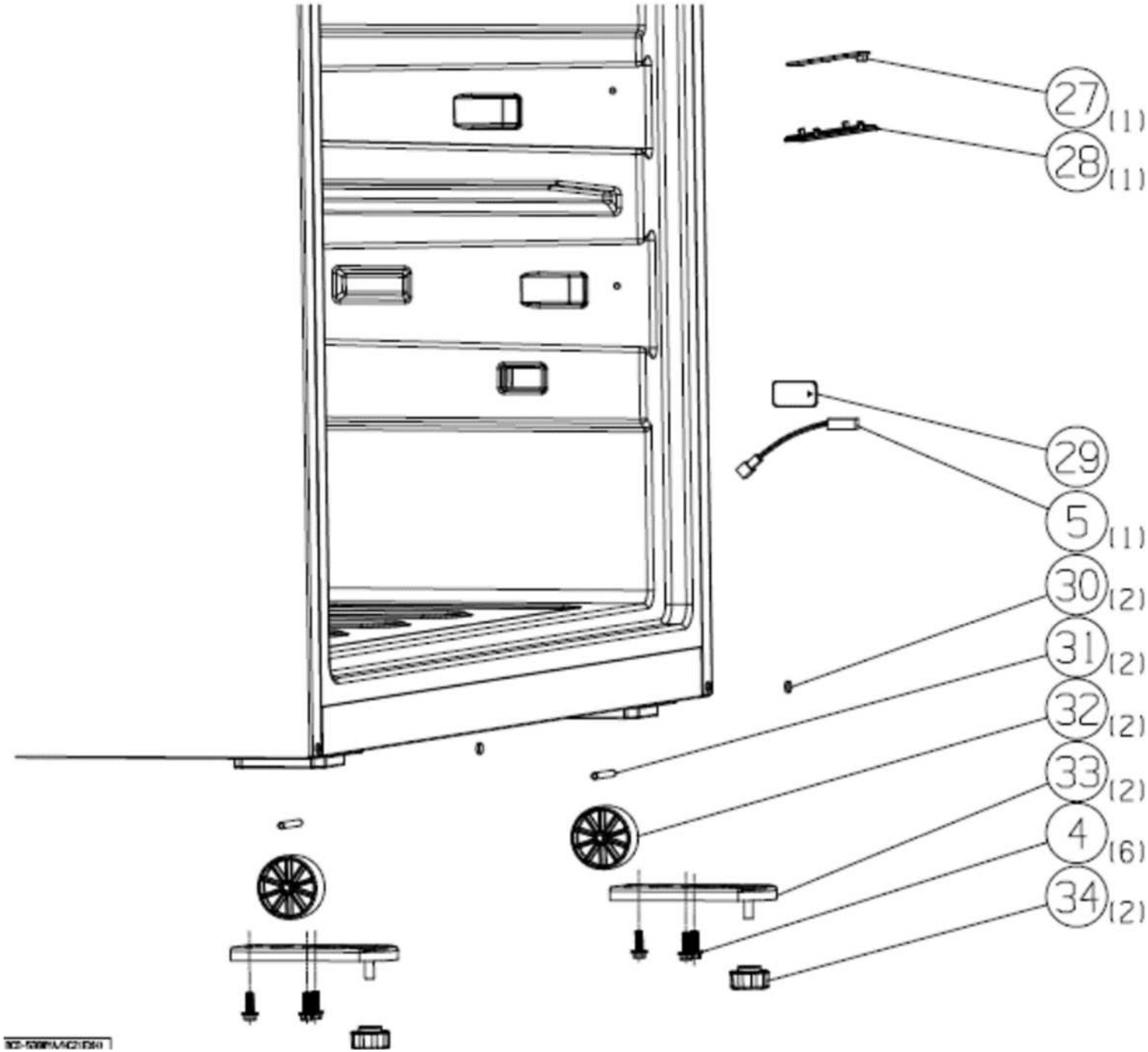
27 (1)
28 (1)
29
5 (1)
30 (2)
31 (2)
32 (2)
33 (2)
4 (6)
34 (2)

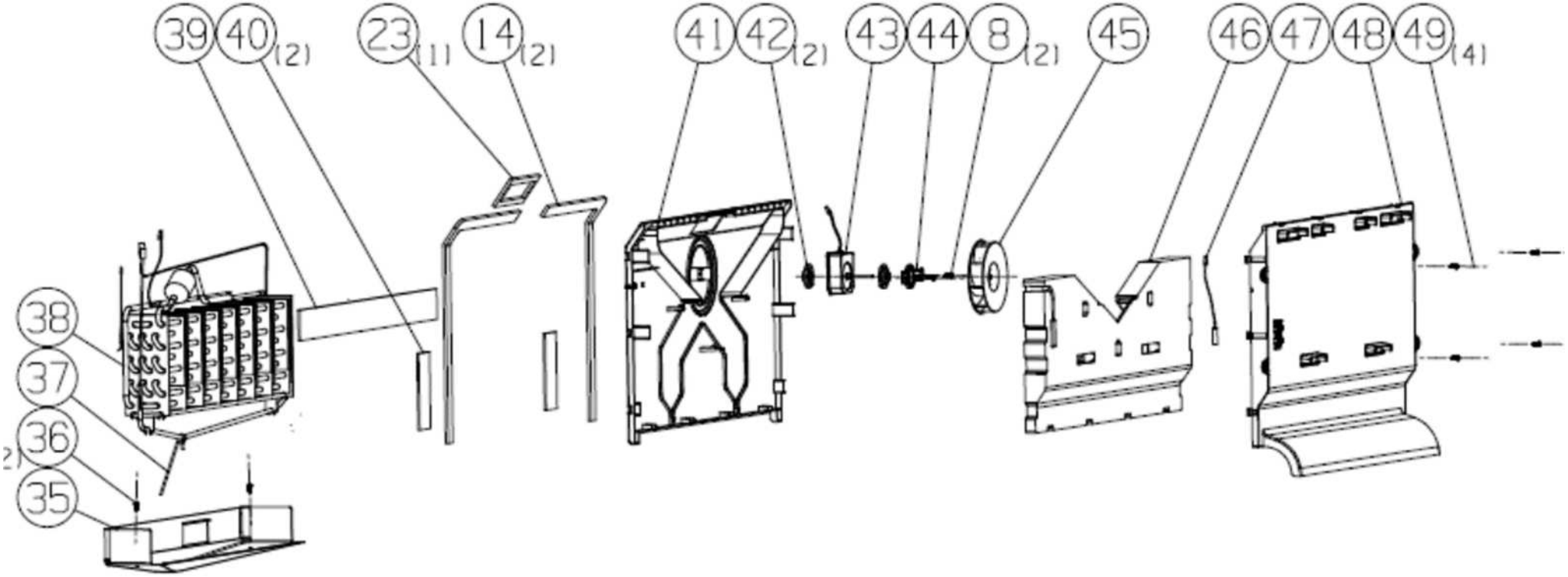
39
40 (2)
23 (1)
14 (2)
41
42 (2)
43
44
8 (2)
45
46
47
48
49 (4)
38
37
36
35

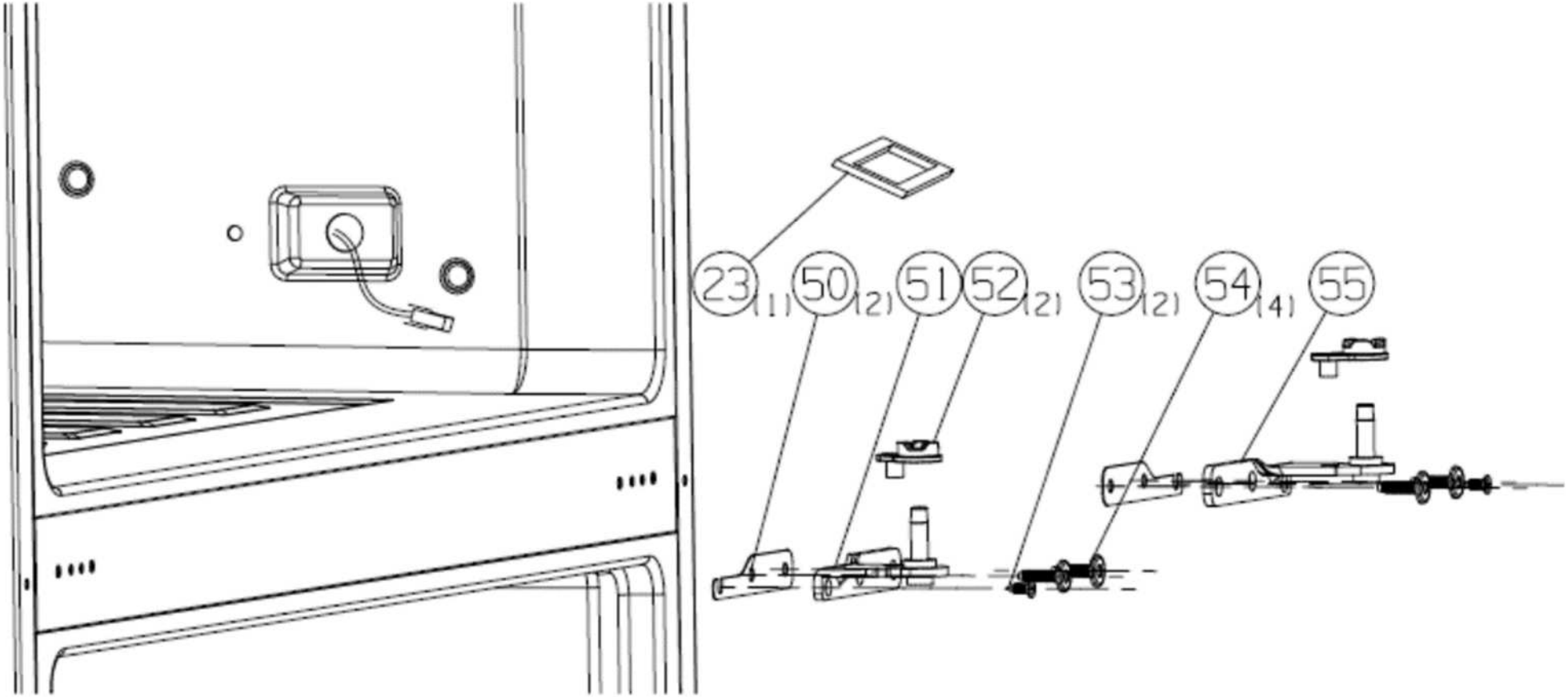
23 (1)
50 (2)
51
52 (2)
53 (2)
54 (4)
55

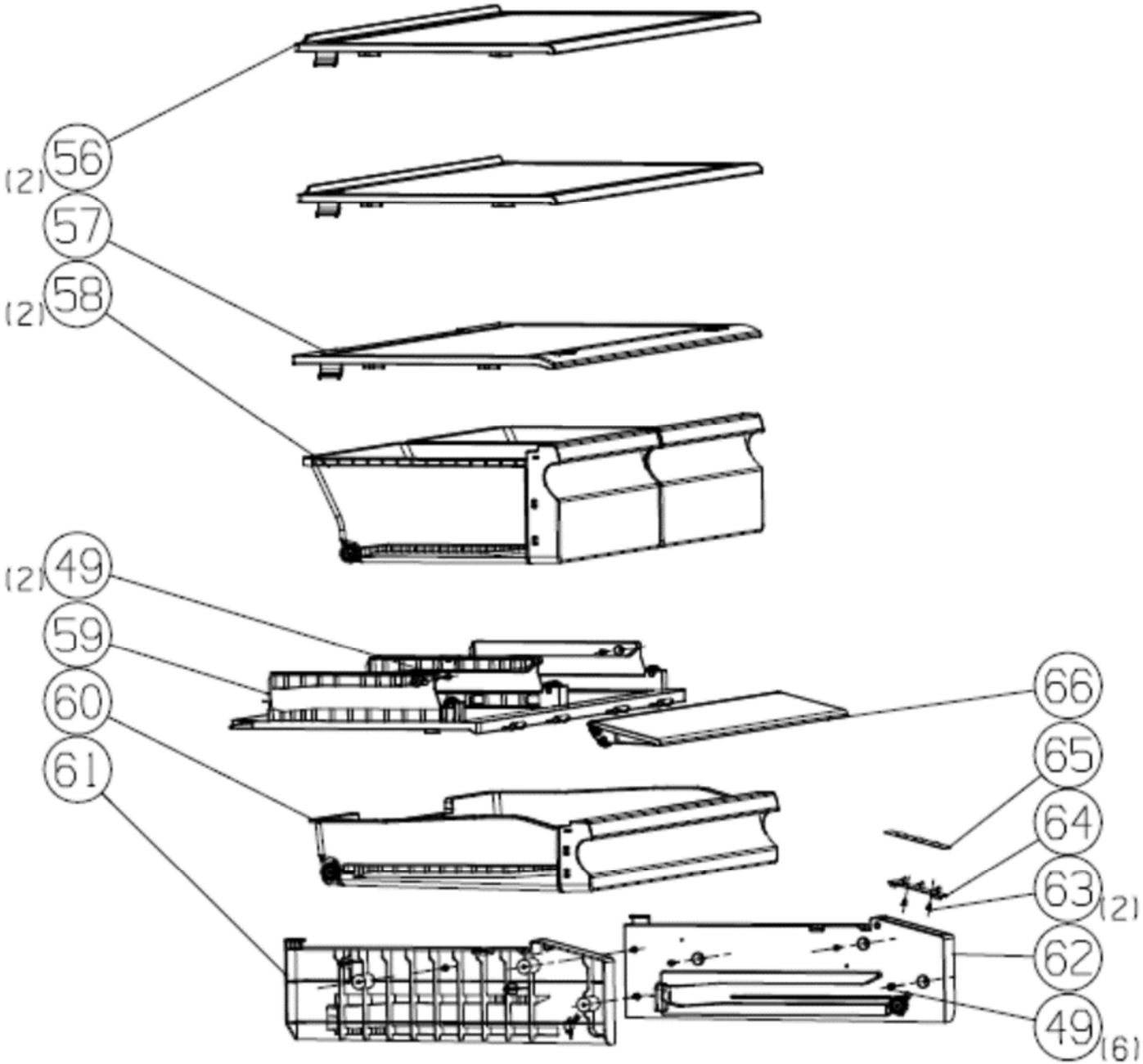
(2) 56
57
(2) 58
(2) 49
59
60
61
66
65
64
63 (2)
62
49 (6)

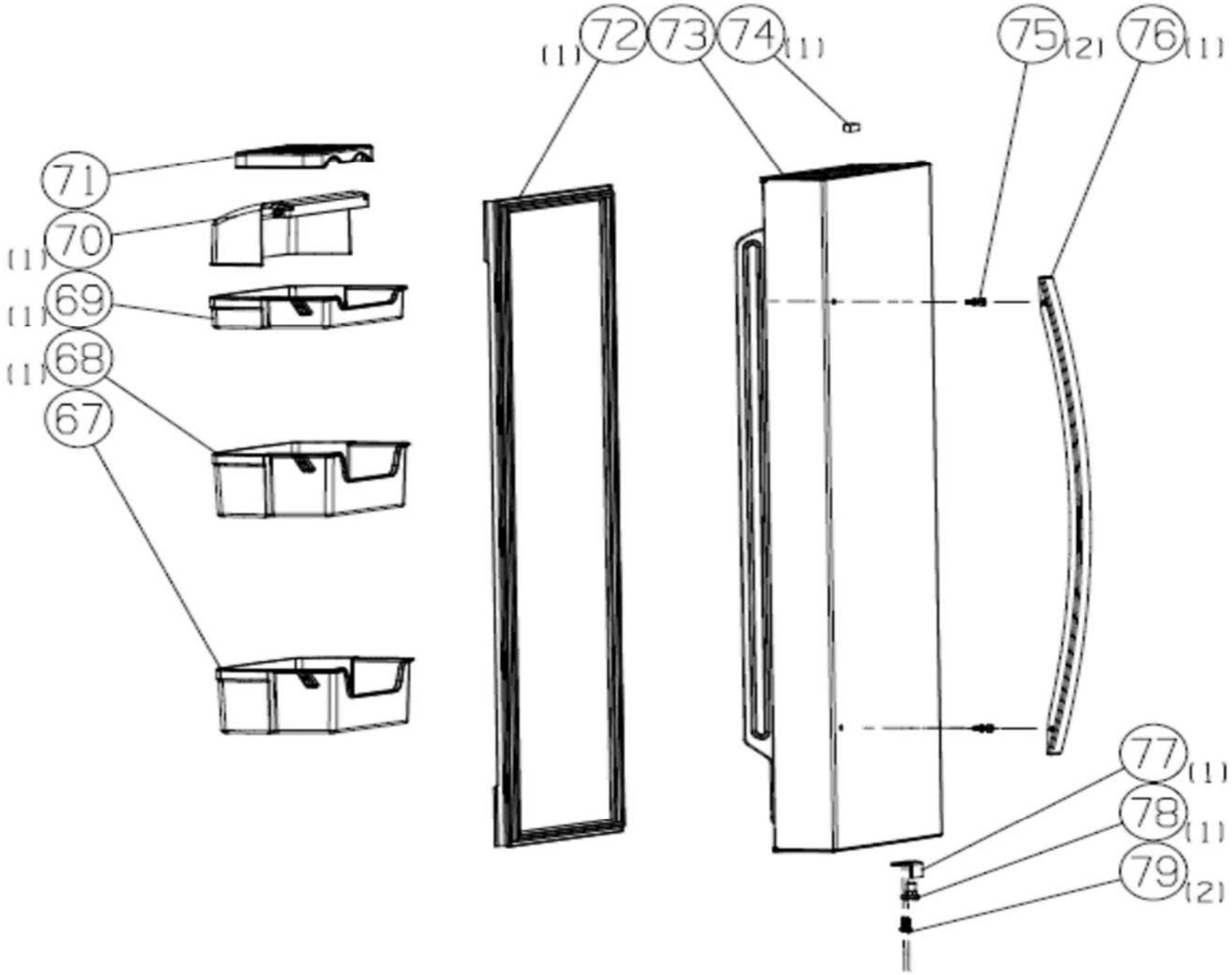
(1) 72
73
74 (1)
75 (2)
76 (1)
71
(1) 70
(1) 69
(1) 68
67
77 (1)
78 (1)
79 (2)

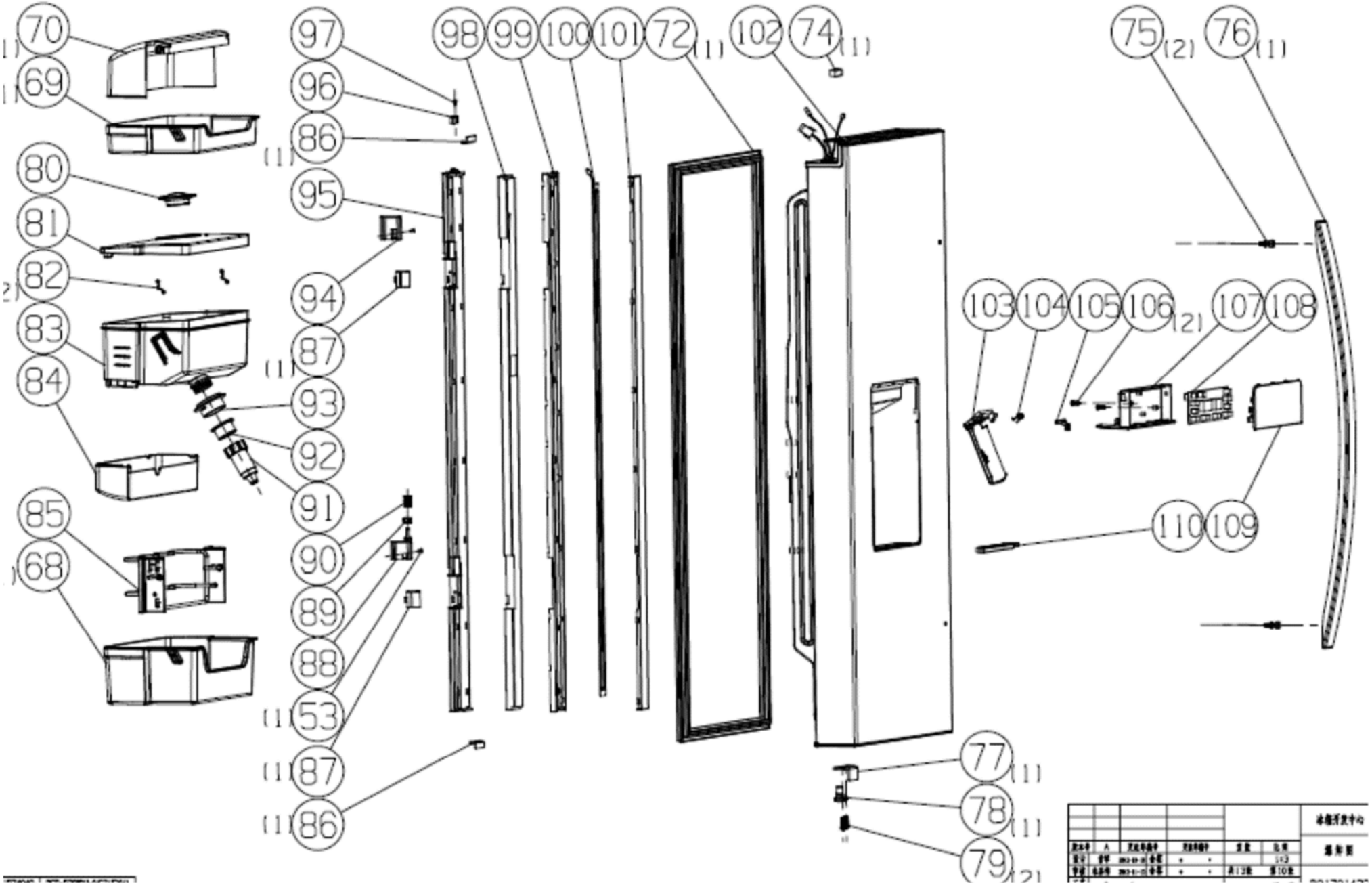
70
69
80
81
82
83
84
85
68
97
96
86
95
94
87
93
92
91
90
89
88
53
87
86
98
99
100
101
72
102
74
75
76
103
104
105
106
107
108
110
109
77
78
79

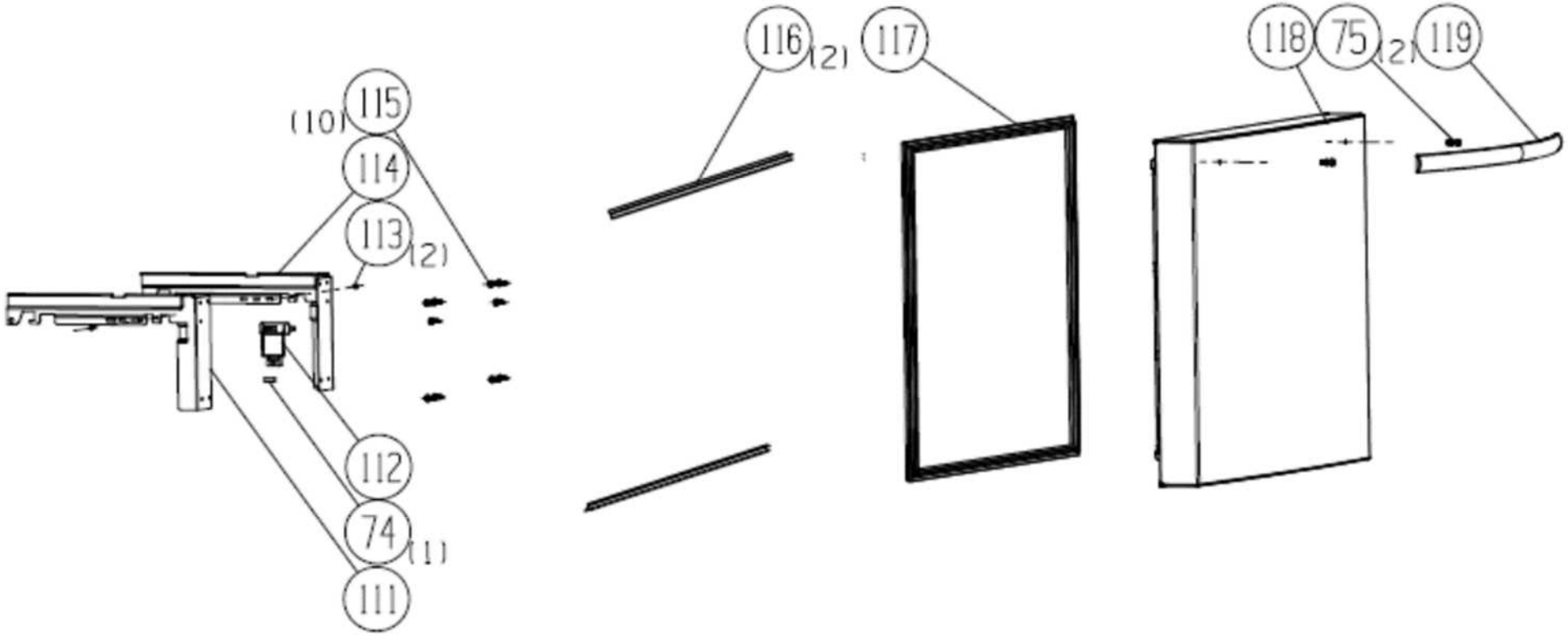
116
(2)
117
118
75
(2)
119
(10)
115
114
113
(2)
112
74
(1)
111

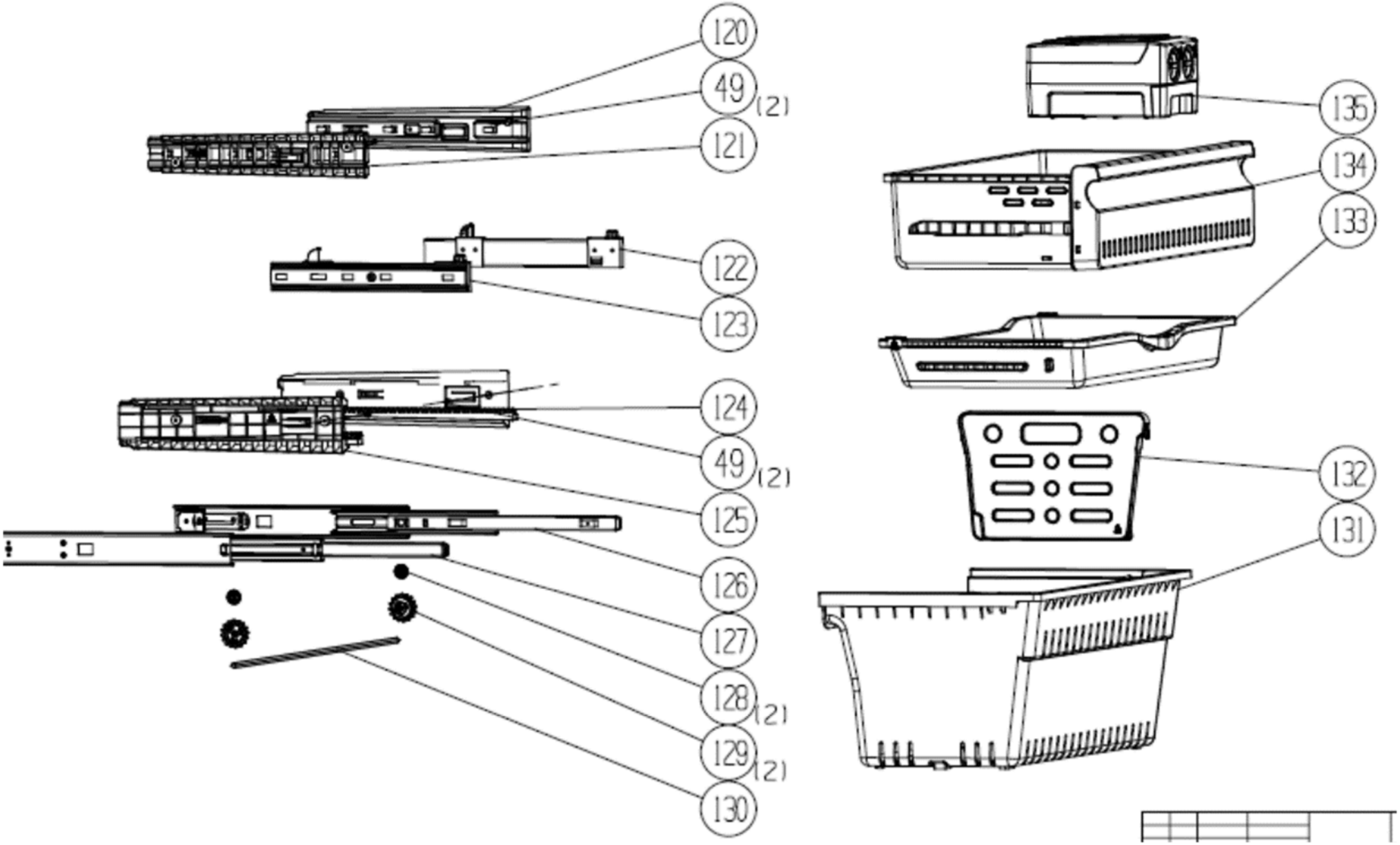
120
49 (2)
121
122
123
124
49 (2)
125
126
127
128 (2)
129 (2)
130
135
134
133
132
131

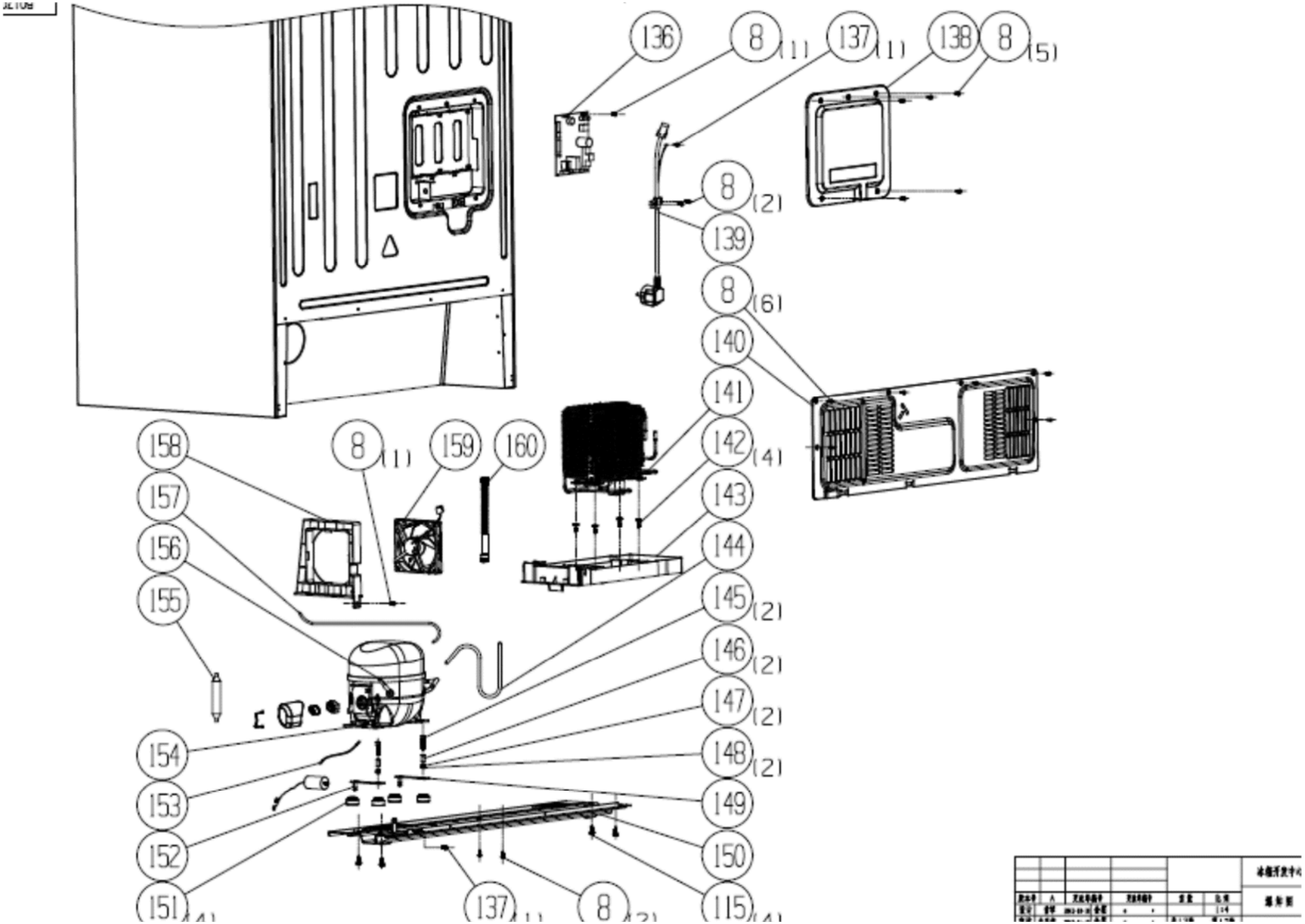
136
8 (1)
137 (1)
138
8 (5)
8 (2)
139
8 (6)
140
141
142 (4)
143
144
145 (2)
146 (2)
147 (2)
148 (2)
149
150
115 (4)
158
157
156
155
154
153
152
151 (4)
8 (1)
159
160
137 (1)
8 (2)

AFR9-F - GFR9-F				
No	Part name	CODE	Part No	pcs
137	fastening components		1006880	2
152	Platen		1072839	1
156	process tube		1092041	1
144	connecting tube		1092056	1
49	self-tapping screw		1093509	16
97	self-tapping screw		1099032	1
8	self-tapping screw		1099042	23
106	self-tapping screw	ZA0091	1099044	2
17	self-tapping screw		1099068	1
113	self-tapping screw		1099076	2
36	self-tapping screw		1099082	2
63	self-tapping screw		1099083	2
53	self-tapping screw		1099084	3
4	special flange self-tapping screw	ZA0195	1099098	12
148	washer		1099120	2
147	washer		1099122	2
151	compressor shockproof rubber pad		1101019	4
79	screw		1104445	4
149	right impact board		1111096	1
145	screw		1111716	2
115	special flange self-tapping screw	ZA0193	1115414	14
155	dry filter		1355795	1
153	compressor grounding wire		1400843	1
47	temperature sensor part	ZA0135	1418404	1
	temperature sensor part	ZA0230	1418409	1
	temperature fuse	ZA0231	1418420	1
31	roll wheel axis		1423638	2
32	roll wheel		1428325	2
71	egg tray	ZA0152	1429073	1
37	defrost stick		1434761	1
30	screw hole cover		1452135	2
139	power board part		1452482	1
14	sponge strip		1453495	6
42	vibration pad	ZA0260	1461686	2
44	fan motor supporter	ZA0227	1461700	1
29	reed pip cover		1467095	1
74	magnetic core	ZA0154	1467280	3
19	air return cover		1468019	1
43	refrigerator fan motor	ZA0226	1468519	1
5	cover part	ZA0196	1468523	3
24	temperature sensor part	ZA0126	1468541	1

AFR9-F - GFR9-F				
No	Part name	CODE	Part No	pcs
25	temperature sensor part		1468541	1
135	ice box part	ZA0176	1469177	1
22	electric wind gate	ZA0201	1485764	1
146	steel sleeve		1490994	2
45	wind blade	ZA0134	1494989	1
160	drain connecting pipe		1509873	1
93	fixed holder	ZA0162	1510335	1
92	sealing washer	ZA0094	1510337	1
80	knob	ZA0156	1510340	1
82	shrapnel		1510375	2
105	Lock instructions slider	ZA0090	1511039	1
104	spring	ZA0089	1511042	1
91	dispenser part	ZA0161	1512999	1
142	self-tapping screw		1520103	4
128	fixed holder		1525305	2
138	control board box cover		1525980	1
34	ajustable bottom feet part	ZA0250	1526269	2
33	bottom leg supporting holder		1526274	2
158	fan motor supporter	ZA0178	1526659	1
125	Left rail bracket		1527688	1
124	Right rail bracket		1527690	1
129	Gear	ZA0261	1527694	2
94	Upper bearing		1527728	1
88	Lower bearing		1527729	1
87	bracket cover		1527730	2
96	vertical baffle guide block		1527734	1
90	spring		1527735	1
159	refrigerator fan motor	ZA0179	1527783	1
89	door stopper		1528414	1
112	Fixed card of magnetic core	ZA0165	1529145	1
27	led light	ZA0128	1529227	2
141	bottom leg supporting holder		1530481	1
54	screw	ZA0136	1534952	4
69	upper shelf		1539074	2
101	vertical baffle front beam		1539081	1
98	vertical baffle foam		1539085	1
35	water drain		1539093	1
85	folding shelf components	ZA0160	1539101	1
121	Left rail bracket		1539127	1
120	Right rail bracket		1539128	1
123	left guided rail part for drawer	ZA0168	1539129	1

AFR9-F - GFR9-F				
No	Part name	CODE	Part No	pcs
122	right guided rail part for drawer	ZA0167	1539132	1
	wing slice evaporator part		1539135	1
56	shelves assembly	ZA0138	1539137	2
3	left upper hinge part	ZA0117	1539141	1
38	wing slice evaporator components		1539143	1
9	right upper hinge part	ZA0120	1539144	1
51	left middle hinge part		1539148	1
55	right middle hinge part	ZA0137	1539150	1
77	door stop		1539153	2
57	crisper box cover components		1539155	1
110	water baffle	ZA0164	1539181	1
78	door stopper	ZA0246	1539186	2
52	door stopper	ZA0087	1539188	2
99	vertical baffle cover		1539191	1
95	Vertical baffle block		1539193	1
59	Fresh drawer cover components	ZA0141	1539194	1
12	light cover	ZA0123	1539199	1
83	water storage box	ZA0158	1539200	1
81	water storage box cover	ZA0157	1539204	1
66	cover part	ZA0147	1539207	1
7	top cover		1539209	1
109	display decorative board-drawing	ZA0093	1539210	1
107	display board box	ZA0092	1539217	1
50	middle hinge cushion		1539219	2
103	impact pole	ZA0088	1539220	1
62	bracket part	ZA0144	1539226	1
76	upper handle part		1539228	2
65	display decorative board-drawing	ZA0146	1539229	1
61	bracket part	ZA0143	1539233	1
60	Fresh drawer parts	ZA0142	1539236	1
119	lower hinge part		1539238	1
130	Rail link pole	ZA0171	1539274	1
127	left guided rail part for drawer	ZA0170	1539281	1
126	right guided rail part for drawer	ZA0169	1539283	1
131	freezer lower drawer	ZA0172	1539288	1
133	Serving tray	ZA0174	1539294	1
134	upper drawer part	ZA0175	1539295	1
132	lower baffle	ZA0173	1539298	1
72	gasket part	ZA0153	1539305	2
117	gasket part	ZA0166	1539314	1
116	inner door gasket part		1539317	2

AFR9-F - GFR9-F				
No	Part name	CODE	Part No	pcs
16	refrigerator air duct cover		1539394	1
15	Refrigerated wind channel foam		1539397	1
20	Wind gate foam		1539398	1
28	light cover	ZA0129	1539399	2
48	wind channel cover board in freezer chamber	ZA0265	1539401	1
41	wind channel cover board in freezer chamber	ZA0263	1539402	1
46	Wind channel foam in freezer chamber	ZA0264	1539403	1
40	sponge block		1539447	2
39	sponge block		1539449	1
143	evaporating dish		1539451	1
140	compressor back guard		1539456	1
13	foam strip		1539467	1
23	sponge block		1539491	3
21	electric wind gate	ZA0124	1539721	1
108	display board part	ZA0163	1539766	1
	heater	ZA0130	1539771	1
100	heater		1539773	1
10	temperature sensor part	ZA0121	1539779	1
26	lamp connecting wire		1539788	1
64	functional board part	ZA0145	1539790	1
11	led light	ZA0122	1539795	1
86	sealing strip		1539881	2
75	handle supporter		1540244	6
84	door middle shelf drawings-drawing	ZA0159	1542923	1
150	compressor base part		1543316	1
70	shelf cover-drawing		1546790	2
68	lower cover part-drawing	ZA0149	1546791	2
67	lower cover part-drawing	ZA0148	1546792	1
58	crisper box part	ZA0140	1546804	2
136	main control board	ZA0006	1546851	1
118	F-Room door		1556369	1
102	R1-Room door		1556386	1
73	R2-Room door		1556393	1
111	left drawer rail		1557363	1
114	right drawer rail		1557365	1
157	connecting tube		1560424	1
2	spring		1562360	2
18	decorative strip-drawing		1569009	1
6	Reflective baffle		1600664	1
154	compressor part	ZA0177	1602163	1
1	case		1606343	1